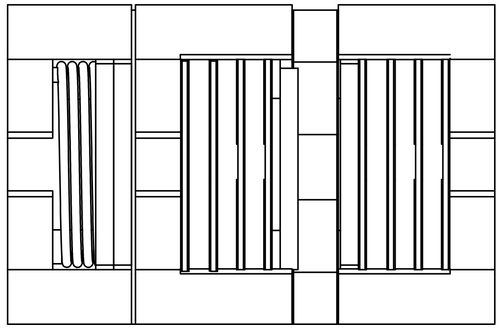

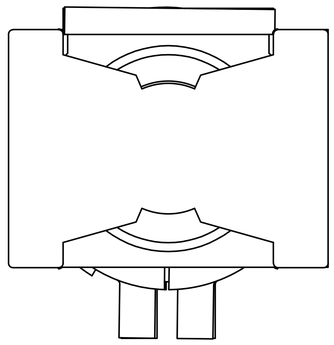

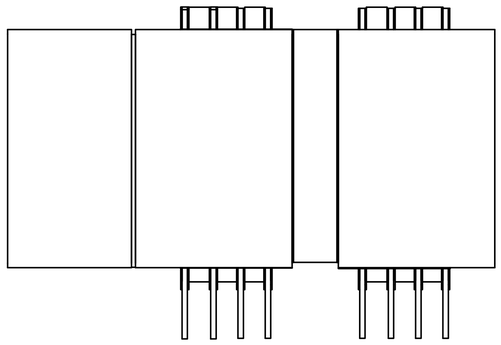

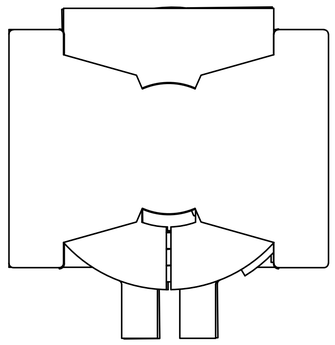

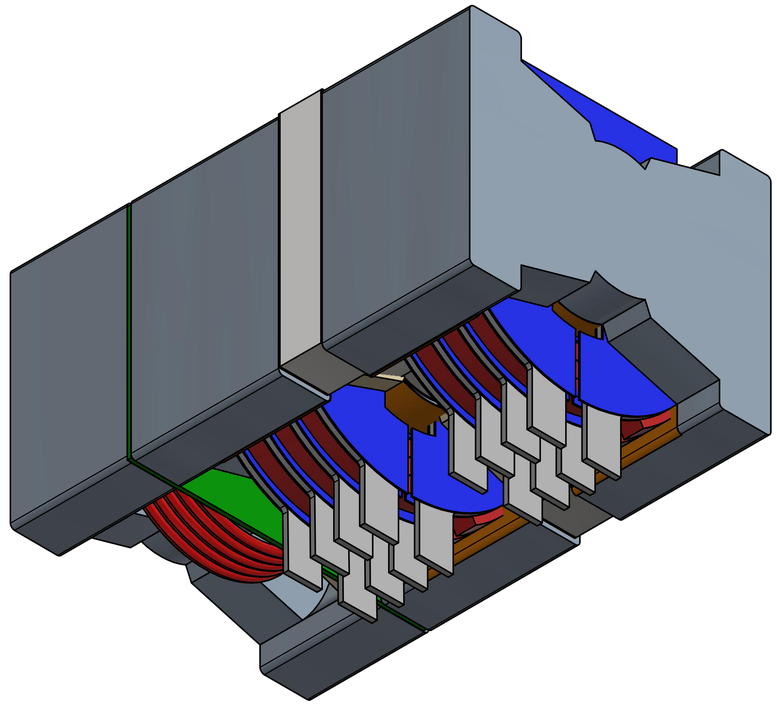

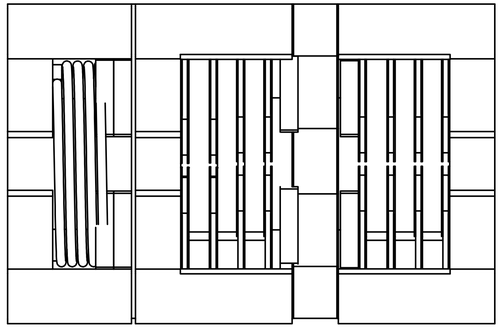

PARTS LIST			
ITEM	QTY	PART NUMBER	DESCRIPTION
1	1	A30000680	
2	1	PQ35-28	
3	1	LR.0008 wo leads	
4	1	Core PQI35 23 I piece	
6	2	Kapton center_MIR2	
7	2	Kapton Core outer_MIR2	
8	16	TFK100002270 Kapton_MIR2	Material: PTFE Thickness 150um ArtNr: 65.300.15 AD CF High-tech-flon
9	6	coil Litz Wire without leads	
10	2	PQ35-35_MIR2	DMEGC PQ35/35
14	8	TFMP100002271	
15	4	ISO100002270 Isolation	
16	4	A100002272	

DRAWN	zechnerf	29.05.2019
CHECKED		
QA		
MFG		
APPROVED		

TITLE

SIZE D | DWG NO TF100002271 assembled | REV

SCALE 3 : 1 | SHEET 1 OF 1